MODELS: GUJ511W*12
GUJ512W*12
GUJ512HW__N*12

EX. VIEW DRAWING 4360
CHASSIS GAS ASSEMBLY

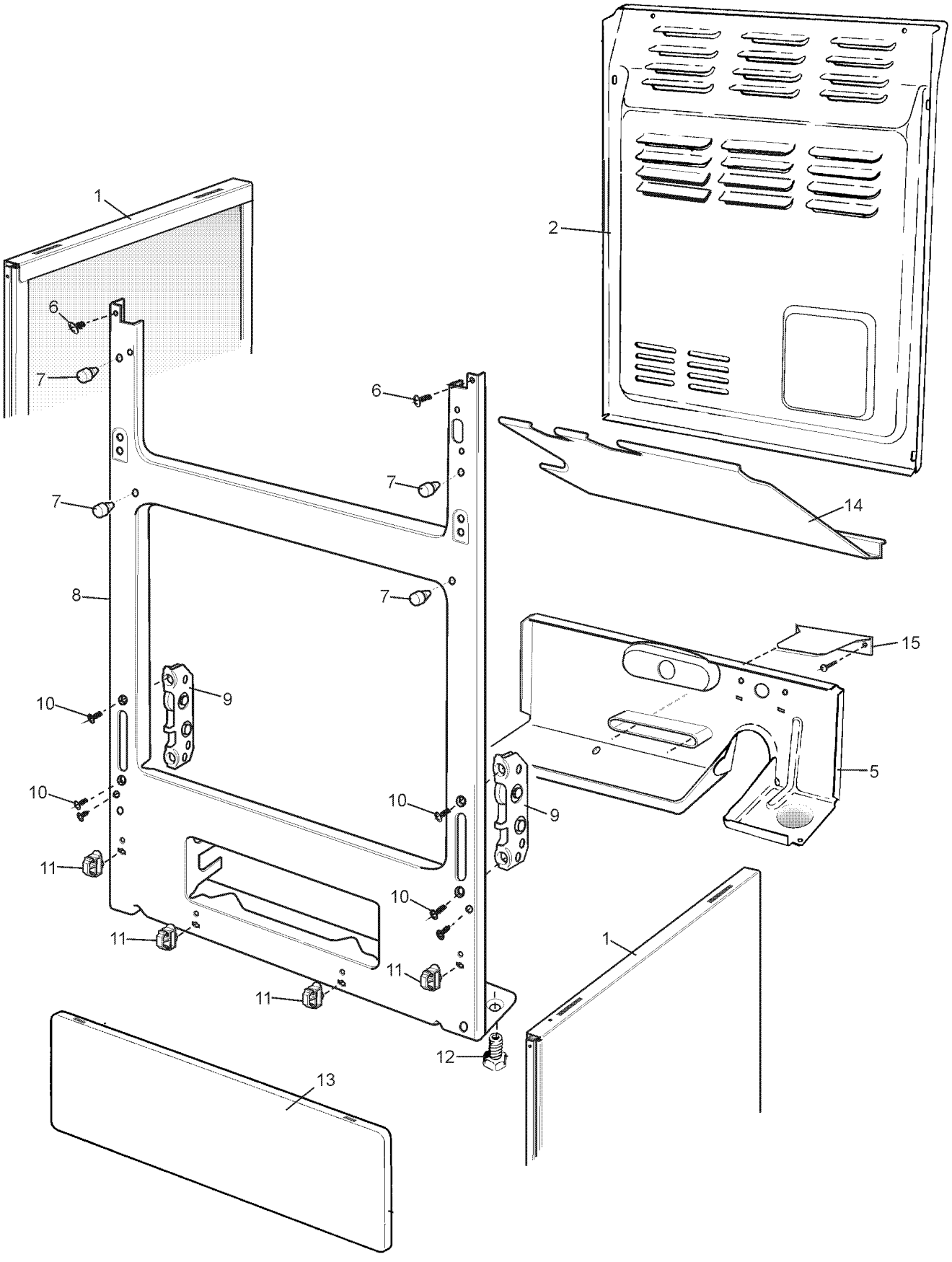

MODELS: GUJ511W*12; *19
GUJ512W*12; *19
GUJ512HW__N*12; *19

EX. VIEW DRAWING 3739
OVEN ASSEMBLY

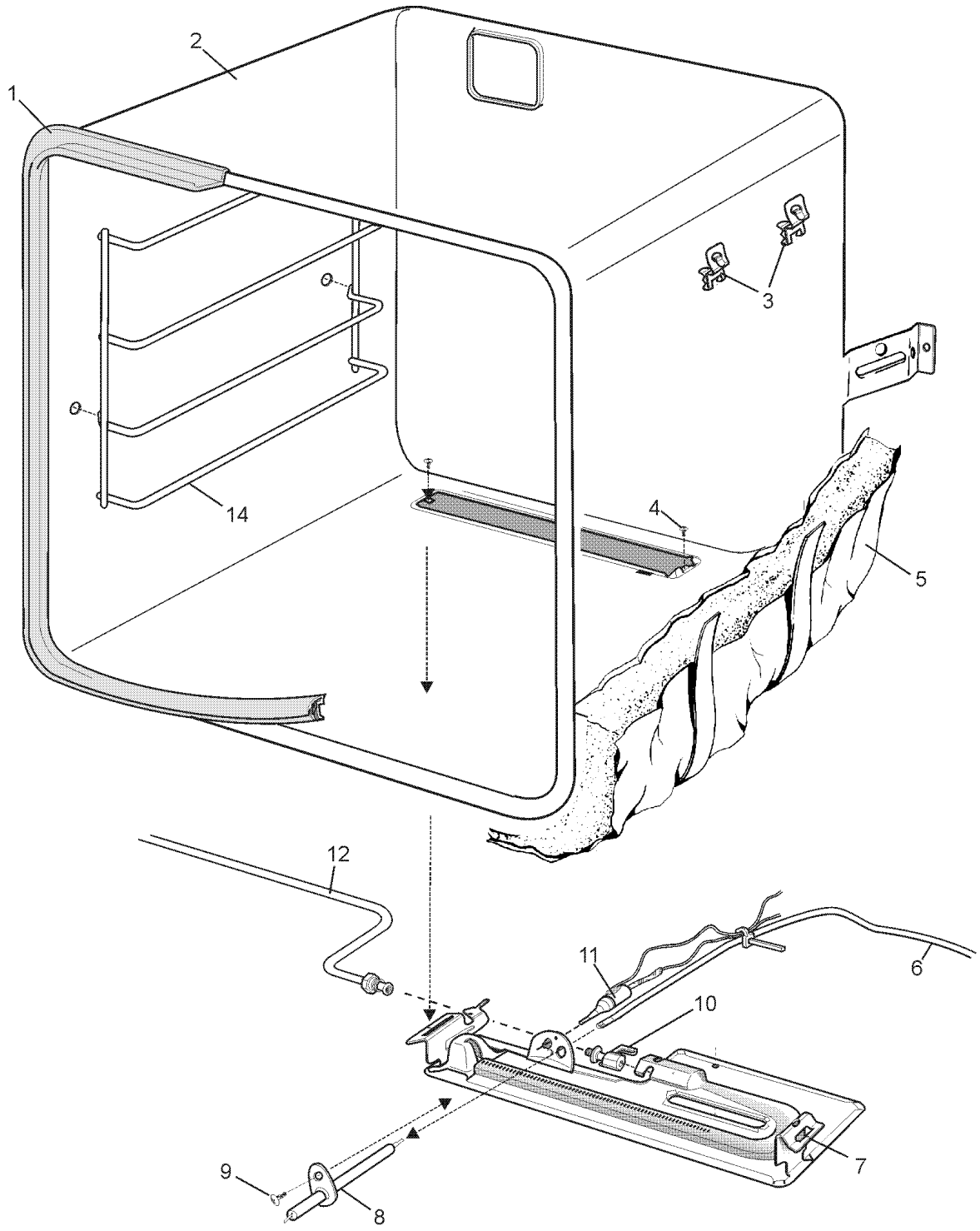

MODELS: GUJ511W*12; *19
GUJ512W*12; *19
GUJ512HW__N*12; *19

EX. VIEW DRAWING 3745
GRILL BOX ASSEMBLY

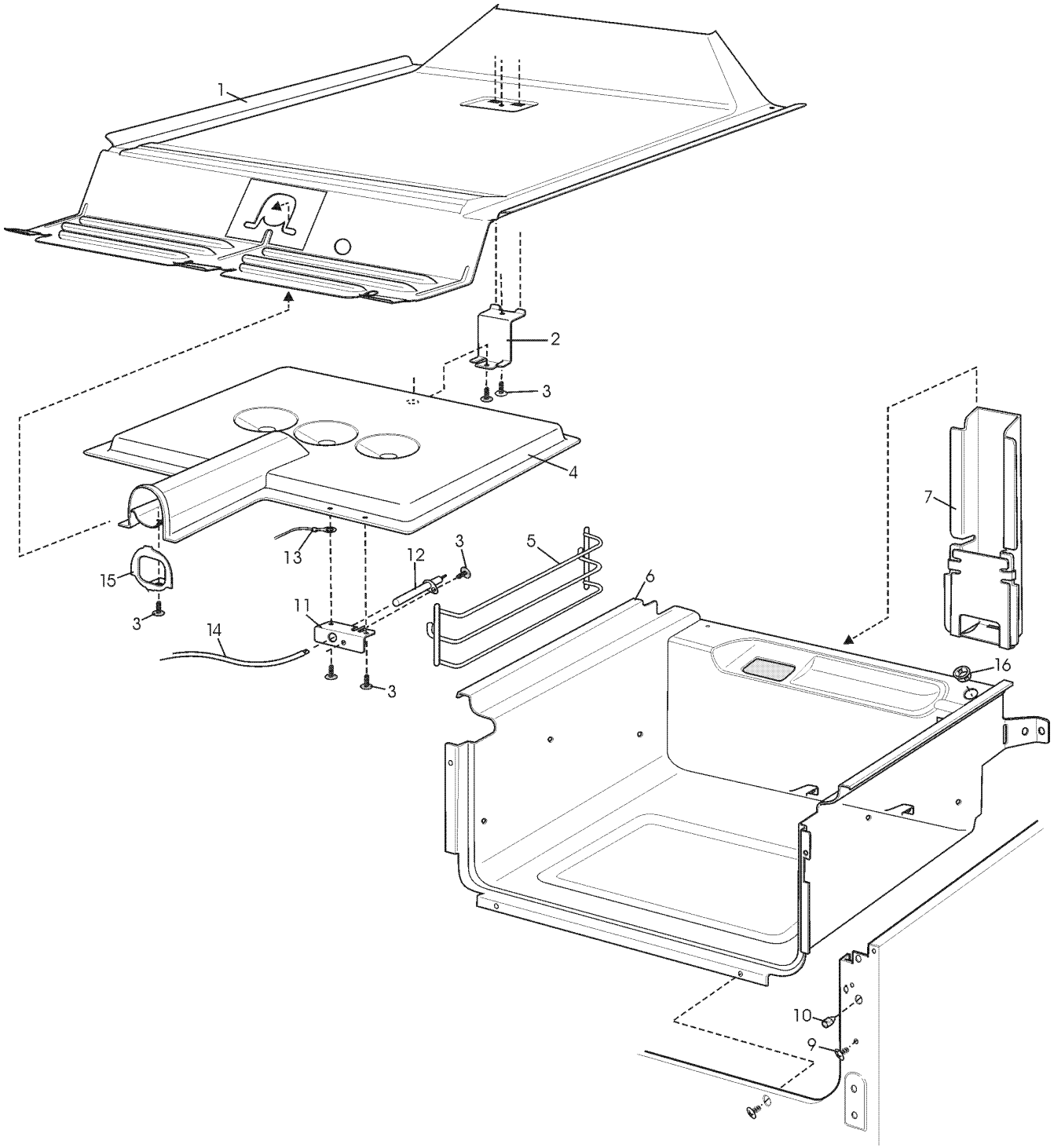

MODELS: GUJ512W*12; *19
GUJ512HW__N*12; *19

EX. VIEW DRAWING 4834
HOB & SPLASHBACK ASSEMBLY

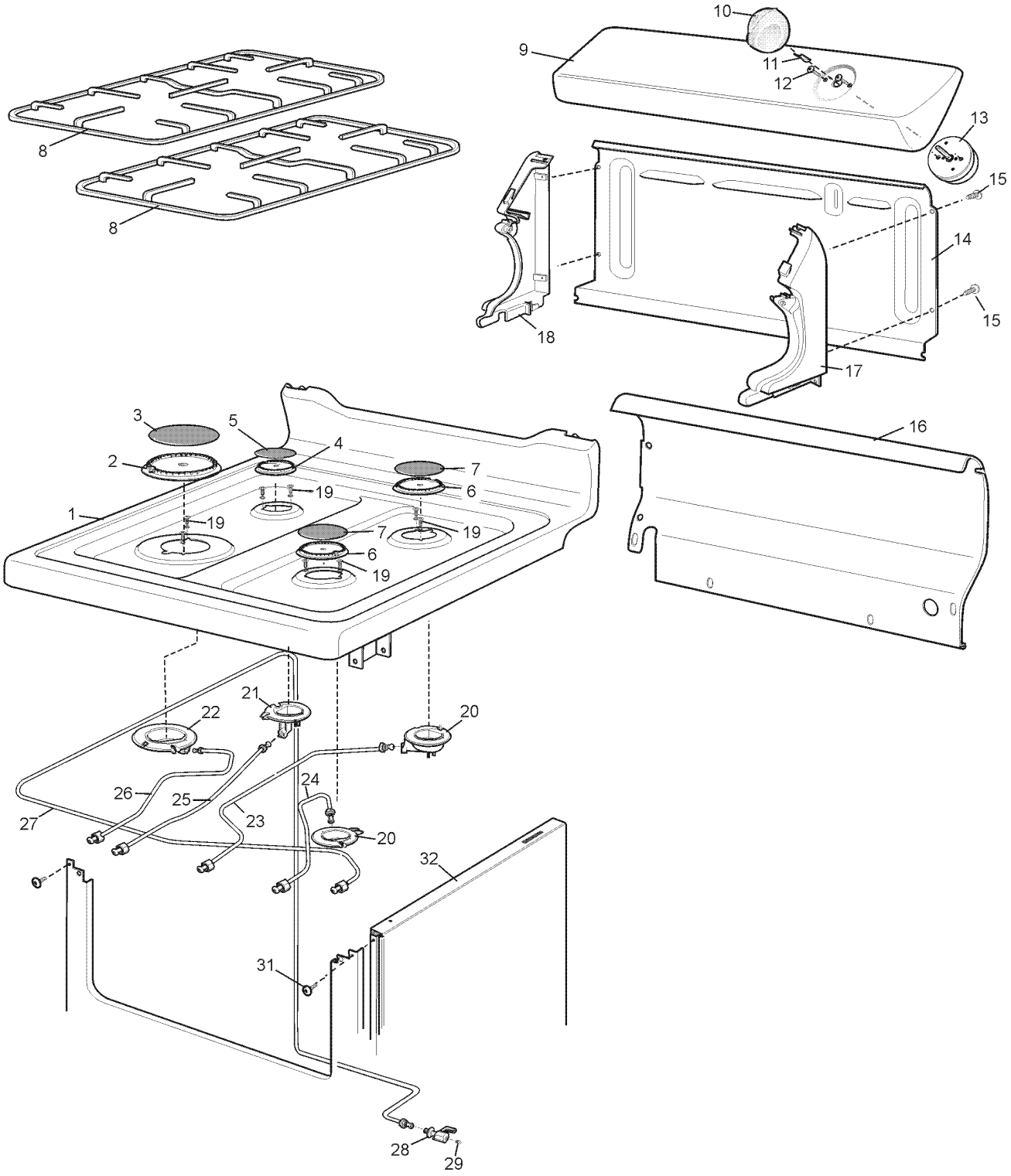

MODELS: GUJ511W*12; *19
GUJ512W*12; *19
GUJ512HW__N*12; *19

EX. VIEW DRAWING 3463
CONTROL PANEL ASSEMBLY

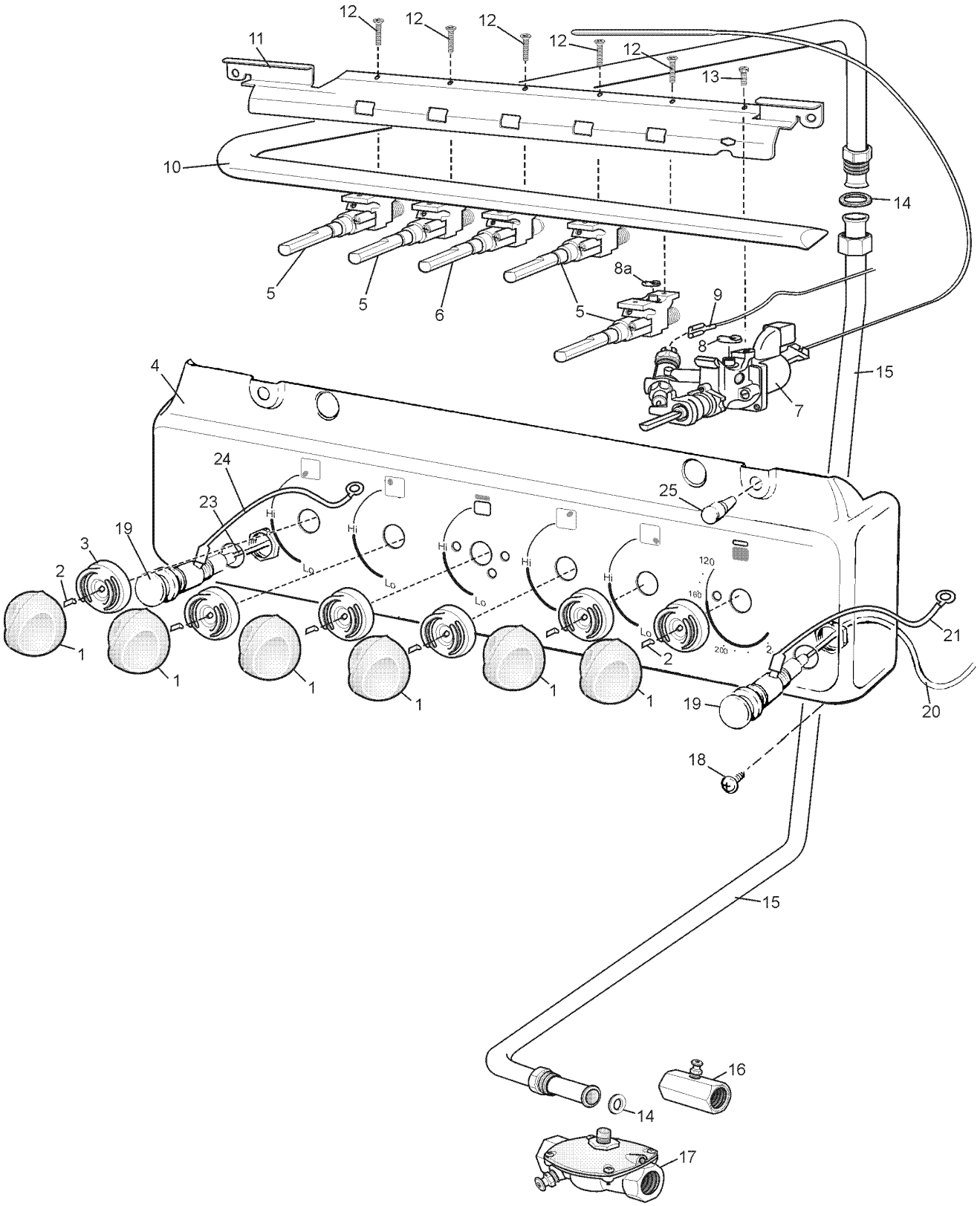

MODELS: GUJ511W*12
GUJ512W*12
GUJ512HW__N*12
GUJ517W*12

EX. VIEW DRAWING 4837
INTERNAL PACK

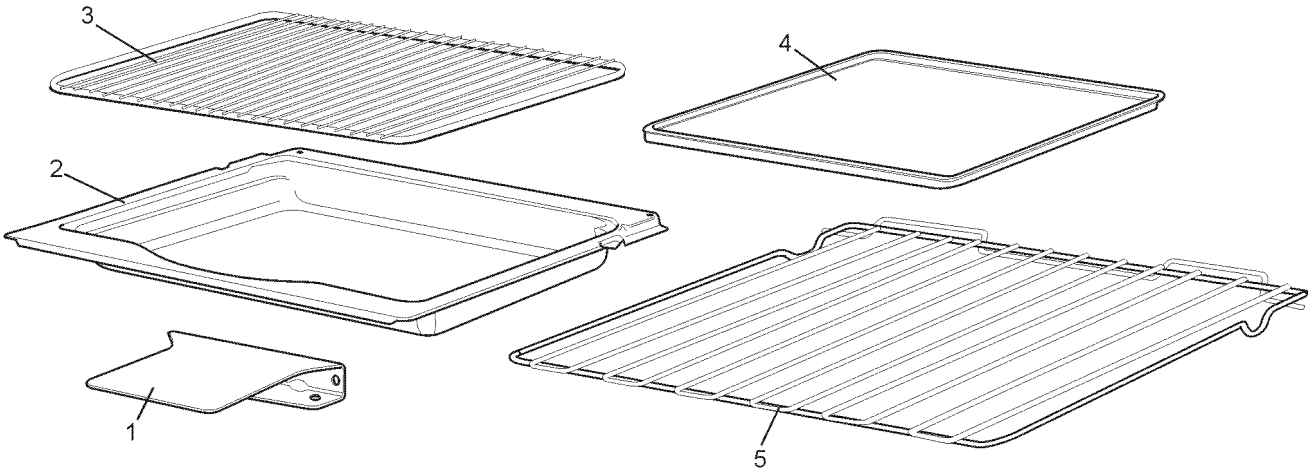

MODELS: GUJ512HW__N*12; *19

EX. VIEW DRAWING 4674
GRILL DOOR ASSEMBLY

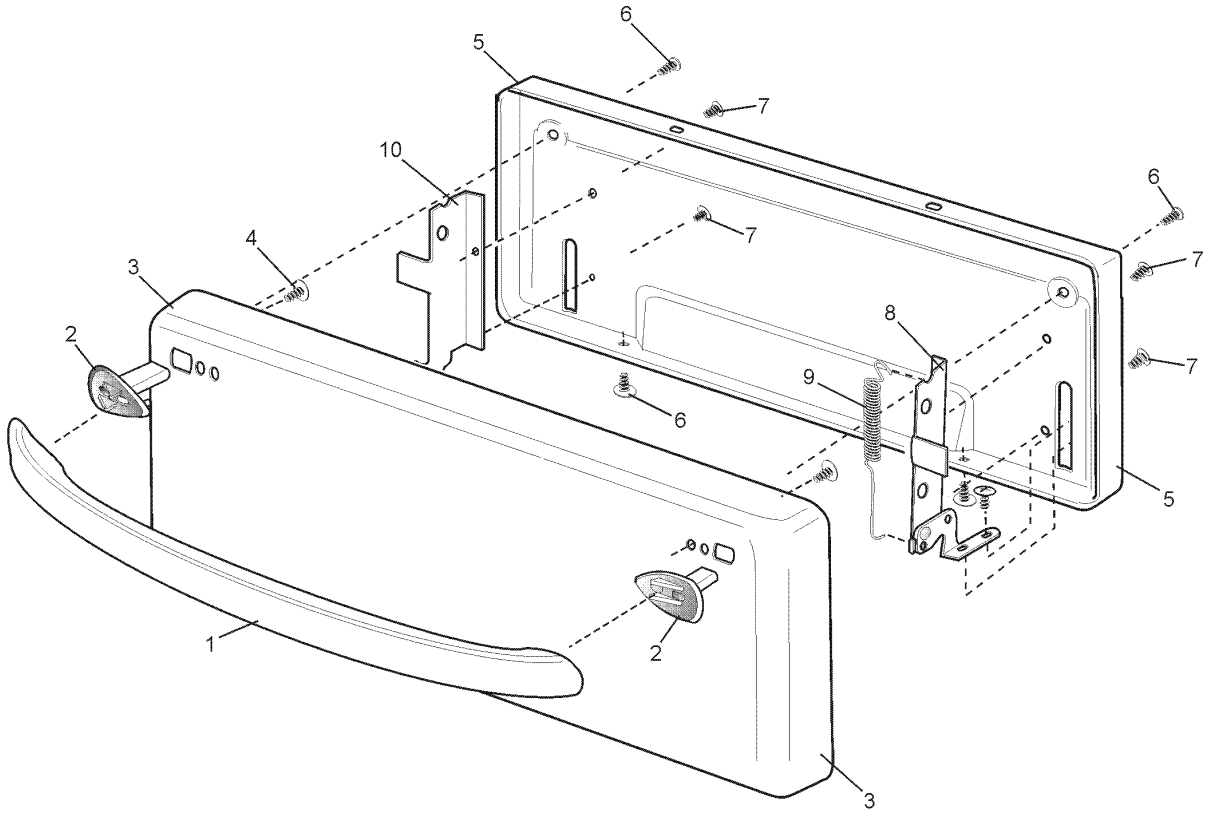

MODELS: GUJ512HW__N*12; *19

EX. VIEW DRAWING 3609
OVEN DOOR ASSEMBLY

	0706 002 110	Washer Al 3/8 x 3/16 20G Soft	3

